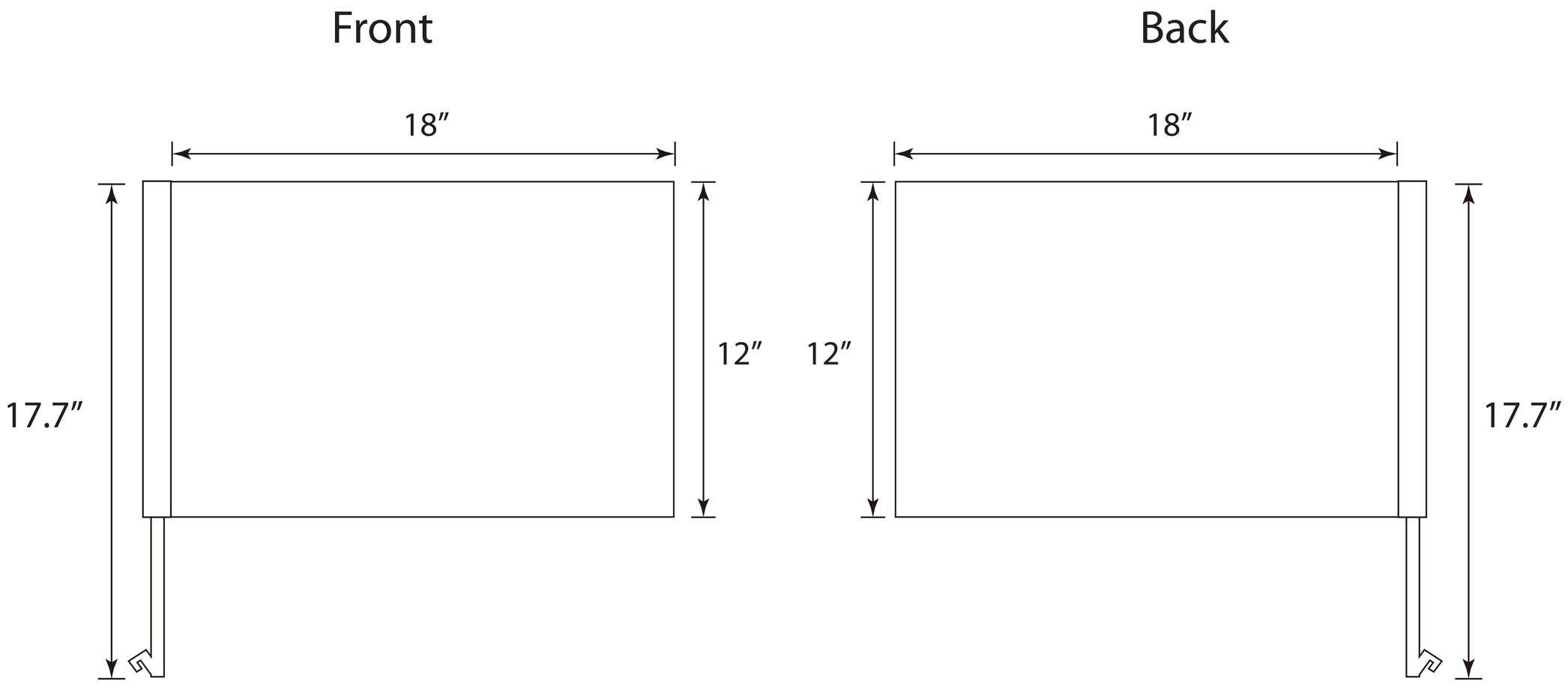# Economy Car Flag-Double